MAN Truck & Bus SE
Vogelweiherstrasse 33
90441 Nürnberg, Germany
man-engines@man.eu
www.man-engines.com

D 114.657/e · wd 10/2023 - 1000 · Printed in Germany
All data provided in this document is non-binding. This data serves informational purposes only and is especially not guaranteed in any way. Depending upon the subsequent specific individual projects, the relevant data may be subject to changes and will be assessed and determined individually for each project. This will depend on the particular characteristics of each individual project, especially specific site and operational conditions.

MAN Truck & Bus – A member of TRATON GROUP

POWER.

Gas Engines for Power Generation.

MAN Engines

EFFICIENT ELECTRICITY AND HEAT GENERATION.

Manufacturers and operators of CHPs have stringent requirements. Robust, compact engines have to work reliably 24 hours a day, 7 days per week. Economic operation over the life cycle of the entire plant is therefore essential. This requires a high level of efficiency by maximum utilisation of primary energy and low plant operating costs. With their continous development programme, MAN engines make a contribution to greater efficiency. Reliable and low in emissions.

CONTENTS

Benefits 4
Hydrogen blending 5
How do naturally aspirated engines differ from turbocharged engines? . . . 6
Peace of mind from tailored service . . 7
Product range 8

Engine description
E0834 and E0836 10
E2876 20
E3268 and E3262 26
E3872 38
E3262 genset 42

BENEFITS

- High power and maximum efficiency
- Low operating costs as a result of low levels of lubricant and fuel consumption as well as extended service intervals (component stability)
- Low emissions due to state-of-the-art combustion technologies
- Low space requirement due to compact design
- Reliable in use thanks to field-tested technology
- Long service life resulting from application-specific design

HYDROGEN BLENDING

Most stationary MAN gas engines are designed for a hydrogen blending of up to 20% by volume (H2) when operated with natural gas. We thus support operators in setting up their CHP units as “hydrogen readiness” plants, something the German government is currently assessing with a view to promoting it within the framework of the Combined Heat and Power Act (KWK-Gesetz).

No design modifications are required for MAN natural gas engines for operation with hydrogen-containing fuels with up to 20% hydrogen blending by volume. Existing installations can be converted to “hydrogen readiness” up to 20% by volume with knock detection.

HOW DO NATURALLY ASPIRATED ENGINES DIFFER FROM TURBOCHARGED ENGINES?

Naturally aspirated engine

- Stoichiometric gas combustion ($\lambda=1$)
- Water-cooled exhaust pipes, without exhaust-gas turbocharging
- Ideally suited for exhaust gas aftertreatment with a three-way catalytic converter

Advantages: The low power density enables long maintenance intervals. Naturally aspirated engines have fewer components and are subject to less mechanical stress. They also offer higher operating reliability with the highest possible overall efficiency.

Turbocharged engine

- Lean gas combustion ($\lambda>1$)
- Exhaust-gas turbocharging complies with the inner-engine exhaust gas values from the TA Luft 2002 regulation for special gas
- For stricter emission regulations: exhaust gas aftertreatment with an oxidation catalytic converter and, if required, with SCR is available

Advantages: When fitted with a turbo charger the engine achieves a higher power density and operates economically and very efficiently.

PEACE OF MIND FROM TAILORED SERVICE

Low-pollutant and fitted with state-of-the-art combustion technology, MAN natural-gas and special-gas engines pave the way to the future of cogeneration. Energy supply is an essential component for economic success. This is why of course you can always count on our corporation after the purchase should you need help.

MAN offers its partners and customers a tailored service concept. The packagers can perform the service entirely independently for their end customers. We customize our training courses to match your requirements by employing the in-depth and proven MAN expertise: Reliable and efficient – just like a MAN gas engine.

PRODUCT RANGE

MAN gas engines for energy generation

Mode of operation		COP with natural gas		COP with special gas	
at engine speed	rpm (Hz)	1 500 (50)	1 800 (60)	1 500 (50)	1 800 (60)
Type	**Cylinders**	**Power (kW)**			
E0834	4	37–68	45–68	80	80
E0836	6	56–110	64–110	110	110
E2876	6	150–220	170–210	130–220	130–200
E3268	8	320–370	340–390	320–370	390
E3262	12	275–550	300–580	450–550	450–580
E3872	12	735	–	735	–

Continuous power of unit (COP following DIN ISO 8528-1)

A unit's continuous power is the amount of power an electricity generator is able to produce over an unlimited number of operating hours per annum between the required maintenance intervals under the stated ambient conditions.

E0834 AND E0836

General data

Gas engine			E0834		E0836	
Engine version			E	LE	E	LE
TYPE	Cylinders		4		6	
	Power	kW	37–80		56–110	
	Bore	mm	108		108	
	Stroke	mm	125		125	
	Displacement	l	4.6		6.9	
kg mm	Overall length	mm	862	1 055	1 090	1 300
	Overall width	mm	742	809	740	740
	Overall height	mm	870	866	930	1 030
	Dry weight	kg	430	495	520	605

POWER AND HEAT FROM NATURAL GAS.
LOW IN POLLUTANTS. LOW LOSSES.

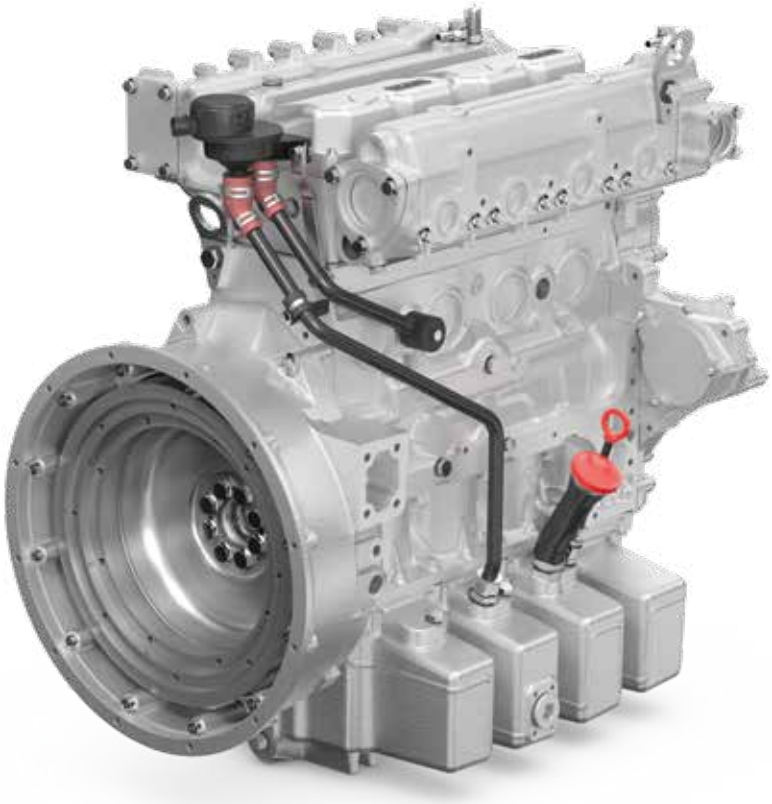

E0834

Technical features

Mode of operation		
at engine speed	rpm (Hz)	

Engine version			
Power		kW	
Coolant heat [1]		kW	
Exhaust heat based on 120 °C [1]		kW	
Efficiency [1]	– mechanical		
	– thermal	%	
	– total		
Emissons status NO_X [2]		mg/Nm³	
Combustion [3]			

1) at 100 % load
2) with 5 % exhaust-gas oxygen
3) m = lean, st = stoichiometric

Data are approximate. Actual values depend on engine configuration options and gas quality. Details on request.

	COP with natural gas						COP with special gas	
	1 500 (50)			1 800 (60)			1 500 (50)	1 800 (60)
	E 302	**LE 302**	**LE 302**	**E 302**	**LE 302**	**LE 302**	**LE 322**	**LE 322**
	54	68	68	62	68	68	80	80
	46	52	51	52	56	56	61	63
	35	32	32	41	36	35	35	41
	36.9	38.6	39.1	36.7	36.4	37.1	38.0	37.0
	55.1	48.5	48.2	54.8	50.7	50.4	49.0	50.0
	92.0	87.2	87.3	91.4	87.1	87.6	87.0	87.0
	–	< 250	< 500	–	< 250	< 500	< 500	< 500
	st	m	m	st	m	m	m	m

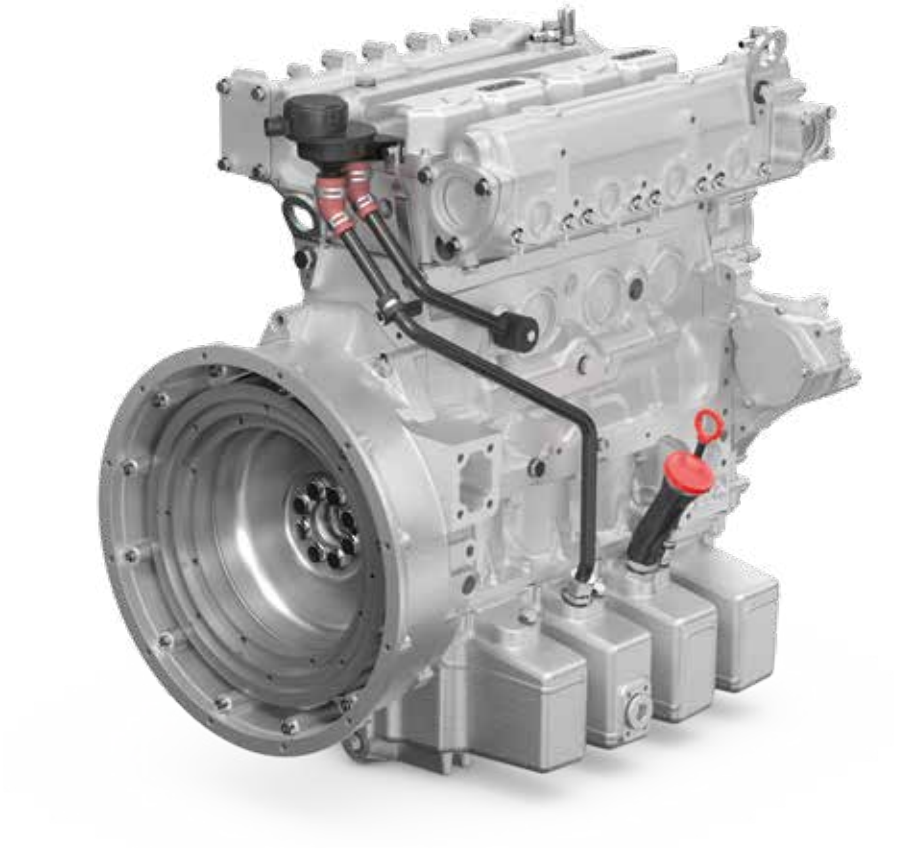

E0834

Technical features

Mode of operation		
at engine speed	rpm (Hz)	

Engine version			
Power		kW	
Coolant heat [1]		kW	
Exhaust heat based on 120 °C [1]		kW	
Efficiency [1]	– mechanical		
	– thermal	%	
	– total		
Emissons status NO_X [2]		mg/Nm³	
Combustion [3]			

1) at 100 % load
2) with 5 % exhaust-gas oxygen
3) m = lean, st = stoichiometric

Data are approximate. Actual values depend on engine configuration options and gas quality. Details on request.

	COP with natural gas + H_2 (20 % by volume)					
	1 500 (50)			1 800 (60)		
	E 302	LE 302	LE 302	E 302	LE 302	LE 302
	54	68	68	62	68	68
	45	52	51	52	52	51
	35	33	31	42	33	31
	36.7	38.6	39.7	36.5	38.1	39.1
	54.7	49.2	48.5	55.3	48.8	47.8
	91.4	87.8	88.1	91.9	86.9	87.0
	–	< 250	< 500	–	< 250	< 500
	st	m	m	st	m	m

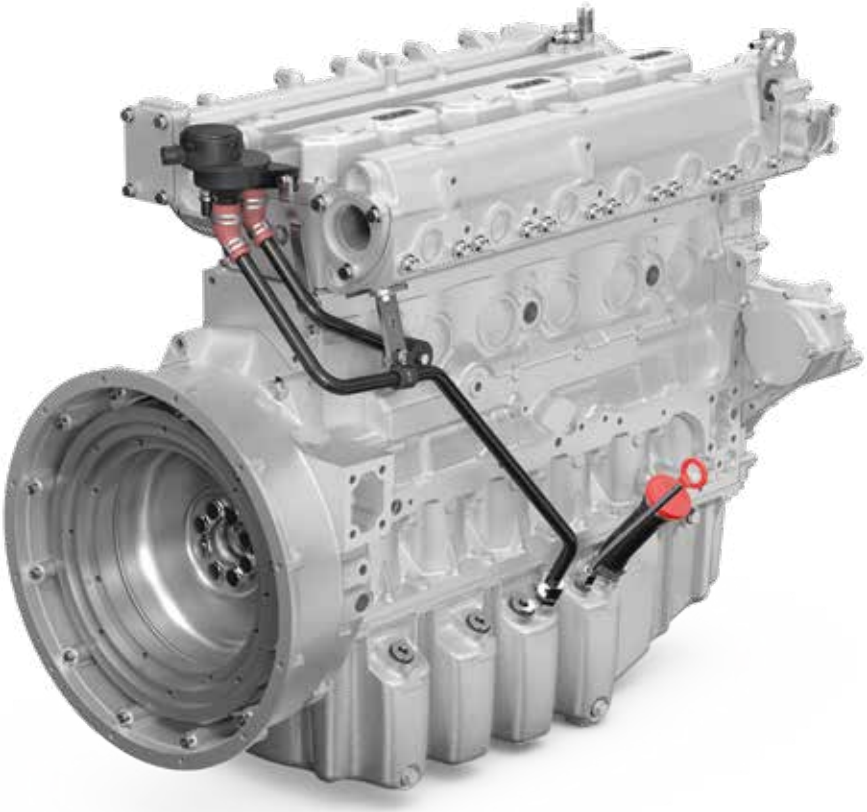

E0836

Technical features

Mode of operation		
at engine speed	rpm (Hz)	

Engine version			
Power		kW	
Coolant heat [1]		kW	
Exhaust heat based on 120 °C [1]		kW	
Efficiency [1]	– mechanical		
	– thermal	%	
	– total		
Emissons status NO_X [2]		mg/Nm³	
Combustion [3]			

1) at 100 % load
2) with 5 % exhaust-gas oxygen
3) m = lean, st = stoichiometric

Data are approximate. Actual values depend on engine configuration options and gas quality. Details on request.

	COP with natural gas						COP with special gas	
	1 500 (50)			1 800 (60)			1 500 (50)	1 800 (60)
	E 302	LE 302	LE 302	E 302	LE 302	LE 302	LE 302	LE 302
	75	110	110	85	110	110	110	110
	66	88	87	75	94	92	77	93
	45	56	53	56	55	55	55	54
	37.2	37.8	38.8	36.2	36.5	37.4	39.0	37.0
	55.1	50.8	50.3	56.0	51.1	51.0	49.0	52.0
	92.4	88.5	89.1	92.2	87.6	88.4	88.0	89.0
	–	< 250	< 500	–	< 250	< 500	< 500	< 500
	st	m	m	st	m	m	m	m

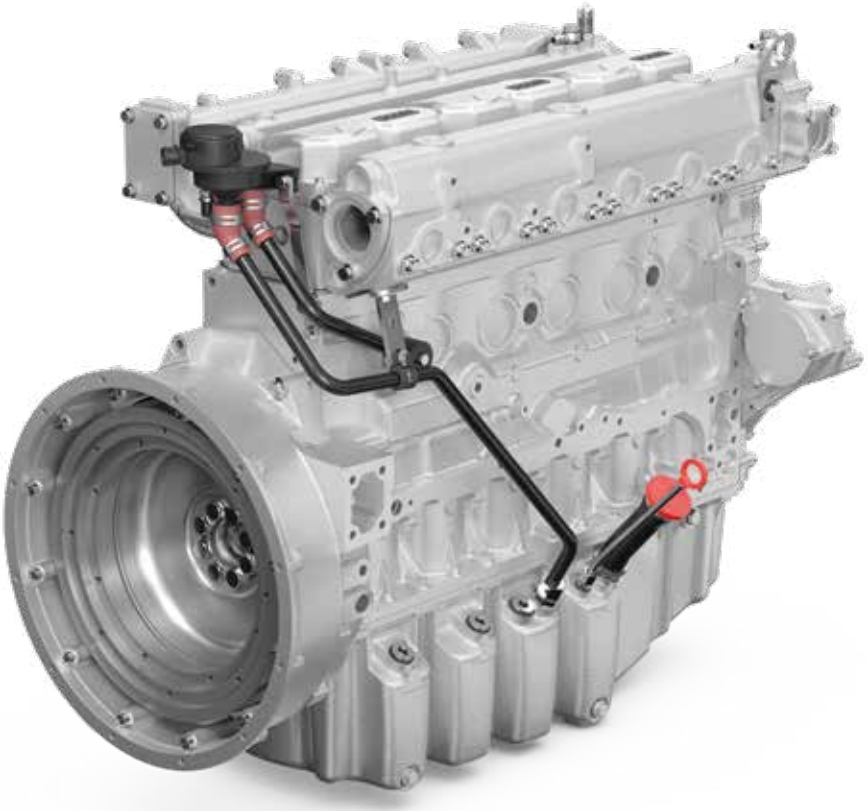

E0836

Technical features

Mode of operation		
at engine speed	rpm (Hz)	

Engine version			
Power		kW	
Coolant heat [1]		kW	
Exhaust heat based on 120 °C [1]		kW	
Efficiency [1]	– mechanical		
	– thermal	%	
	– total		
Emissons status NO_X [2]		mg/Nm³	
Combustion [3]			

1) at 100 % load
2) with 5 % exhaust-gas oxygen
3) m = lean, st = stoichiometric

Data are approximate. Actual values depend on engine configuration options and gas quality. Details on request.

	COP with natural gas + H_2 (20 % by volume)					
	1 500 (50)			1 800 (60)		
	E 302	LE 302	LE 302	E 302	LE 302	LE 302
	75	110	110	85	110	110
	67	91	87	76	87	86
	44	59	55	57	50	48
	37.4	36.9	38.5	36.4	38.6	39.1
	55.7	52.0	50.7	56.7	49.4	49.0
	93.0	88.9	89.2	93.0	87.9	88.1
	–	< 250	< 500	–	< 250	< 500
	st	m	m	st	m	m

E2876

General data

Gas engine			E2876		
Engine version			E	LE	TE
TYPE	Cylinders		6		
	Power	kW	130–220		
	Bore	mm	128		
	Stroke	mm	166		
	Displacement	l	12.8		
kg mm	Overall length	mm	1 330	1 520	1 545
	Overall width	mm	830	830	835
	Overall height	mm	1 166	1 226	1 226
	Dry weight	kg	830	985–990	920

OR FROM SPECIAL GAS.
CARBON-NEUTRAL. SUSTAINABLE.

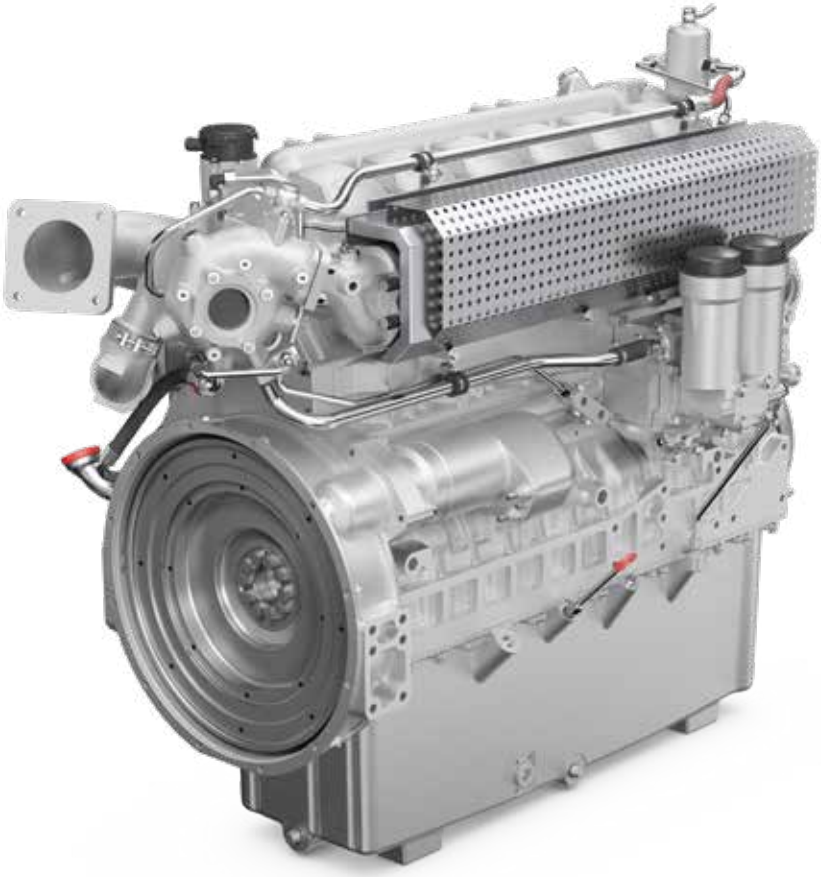

E2876

Technical features

Mode of operation		
at engine speed	rpm (Hz)	
Engine version		
Power	kW	
Coolant heat [1]	kW	
Exhaust heat based on 120 °C [1]	kW	
Efficiency [1] – mechanical		
– thermal	%	
– total		
Emissons status NO_X [2]	mg/Nm³	
Combustion [3]		

1) at 100 % load
2) with 5 % exhaust-gas oxygen
3) m = lean, st = stoichiometric

Data are approximate. Actual values depend on engine configuration options and gas quality. Details on request.

	COP with natural gas				COP with special gas			
	1 500 (50)		1 800 (60)		1 500 (50)		1 800 (60)	
	E 312	LE 302	E 312	LE 302	TE 302	LE 202	TE 302	LE 302
	150	210	170	210	130	220	130	200
	133	110	151	125	124	103	132	106
	94	130	115	142	56	139	60	137
	37.2	39.1	36.4	36.9	38.0	40.0	36.0	38.0
	56.2	47.6	57.0	50.0	53.0	49.0	54.0	51.0
	93.3	86.7	93.4	86.9	91.0	89.0	90.0	89.0
	–	< 500	–	< 500	< 500	< 500	< 500	< 500
	st	m	st	m	m	m	m	m

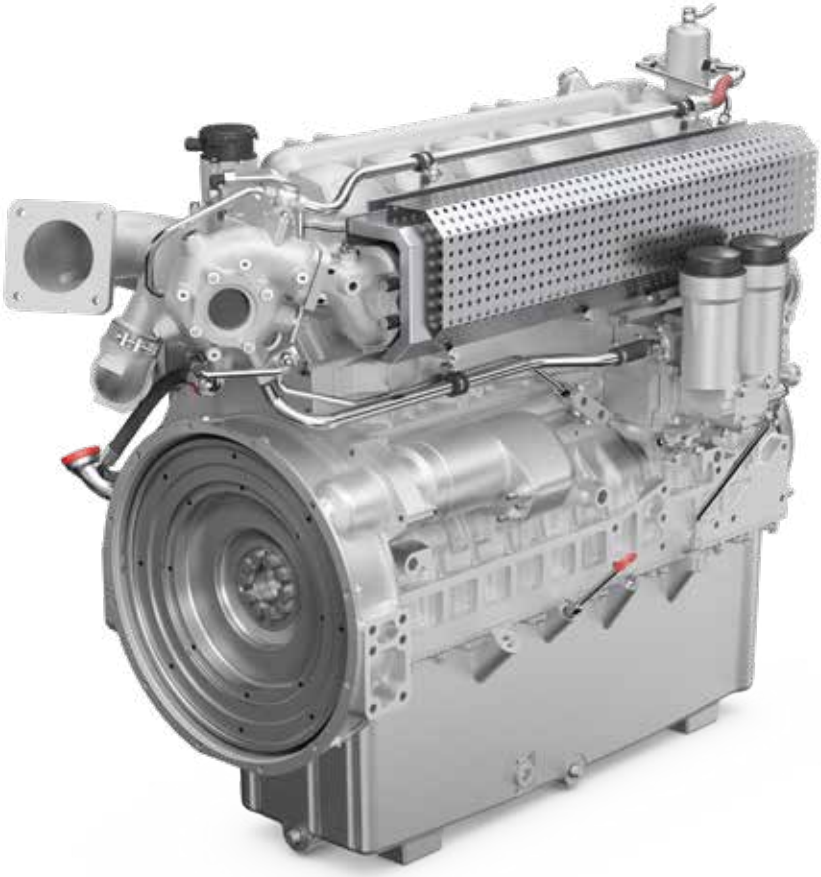

E2876

Technical features

Mode of operation		
at engine speed	rpm (Hz)	

Engine version			
Power		kW	
Coolant heat [1]		kW	
Exhaust heat based on 120 °C [1]		kW	
Efficiency [1]	– mechanical		
	– thermal	%	
	– total		
Emissons status NO_X [2]		mg/Nm³	
Combustion [3]			

1) at 100 % load
2) with 5 % exhaust-gas oxygen
3) m = lean, st = stoichiometric

Data are approximate. Actual values depend on engine configuration options and gas quality. Details on request.

	COP with natural gas + H_2 (20 % by volume)	
	1 500 (50)	1 800 (60)
	E 312	E 312
	150	170
	132	150
	95	120
	37.1	36.4
	56.8	57.9
	93.9	94.3
	–	–
	st	st

E3268 AND E3262

General data

Gas engine			E3268	E3262	
Engine version			LE	E	LE
TYPE	Cylinders		8	12	
	Power	kW	320–390	275–580	
	Bore	mm	132	132	
	Stroke	mm	157	157	
	Displacement	l	17.2	25.8	
kg mm	Overall length	mm	1 620	1 743	1 748
	Overall width	mm	1 210	1 245	1 243
	Overall height	mm	1 422	1 494	1 500
	Dry weight	kg	1 497	1 763	1 849

OR WITH HYDROGEN BLENDING.
FOR LOWER CONSUMPTION OF NATURAL GAS.

E3268

Technical features

Mode of operation		
at engine speed	rpm (Hz)	

Engine version			
Power		kW	
Coolant heat [1]		kW	
Exhaust heat based on 120 °C [1]		kW	
Efficiency [1]	– mechanical		
	– thermal	%	
	– total		
Emissons status NO_X [2]		mg/Nm³	
Combustion [3]			

1) at 100 % load
2) with 5 % exhaust-gas oxygen
3) m = lean, st = stoichiometric

Data are approximate. Actual values depend on engine configuration options and gas quality. Details on request.

	COP with natural gas						
	1 500 (50)				1 800 (60)		
	LE 212	LE 212	LE 242	LE 242	LE 212	LE 212	LE 242
	370	370	320	320	390	390	340
	185	187	174	160	206	198	175
	211	210	204	181	233	214	206
	38.4	39.2	39.0	41.0	37.4	39.3	40.0
	46.7	47.0	50.0	48.0	46.7	45.8	48.0
	85.1	86.2	89.0	89.0	84.1	85.0	88.0
	< 250	< 500	< 250	< 500	< 250	< 500	< 500
	m	m	m	m	m	m	m

E3268

Technical features

Mode of operation

at engine speed	rpm (Hz)	

Engine version

Power		kW	
Coolant heat [1]		kW	
Exhaust heat based on 120 °C [1]		kW	
Efficiency [1]	– mechanical		
	– thermal	%	
	– total		
Emissons status NO_X [2]		mg/Nm³	
Combustion [3]			

1) at 100 % load
2) with 5 % exhaust-gas oxygen
3) m = lean, st = stoichiometric

Data are approximate. Actual values depend on engine configuration options and gas quality. Details on request.

	COP with special gas							
	1 500 (50)					1 800 (60)		
	LE 222	LE 222	LE 232	LE 252	LE 262	LE 252	LE 262	LE 222
	370	370	370	320	320	340	340	390
	192	176	193	173	163	186	179	201
	225	202	222	194	177	222	201	236
	39.0	41.0	40.0	40.0	41.0	38.0	40.0	40.0
	50.0	47.0	49.0	50.0	48.0	49.0	48.0	50.0
	89.0	88.0	89.0	90.0	89.0	87.0	88.0	90.0
	< 250	< 500	< 500	< 500	< 500	< 500	< 500	< 500
	m	m	m	m	m	m	m	m

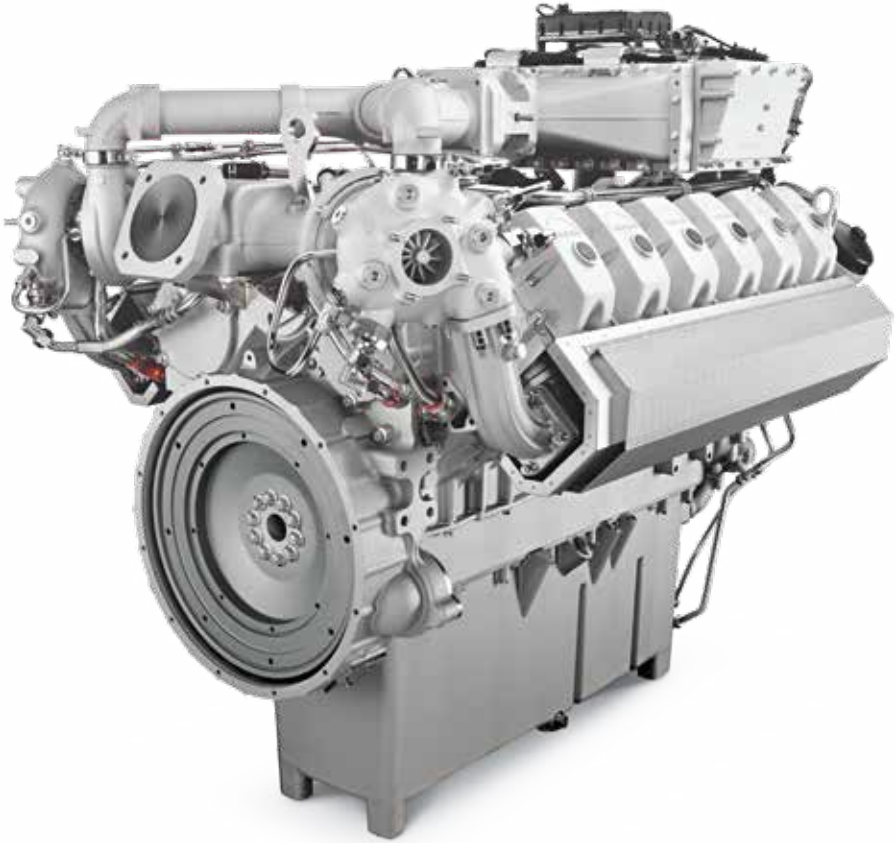

E3262

Technical features

Mode of operation		
at engine speed	rpm (Hz)	

Engine version			
Power		kW	
Coolant heat [1]		kW	
Exhaust heat based on 120 °C [1]		kW	
Efficiency [1]	– mechanical		
	– thermal	%	
	– total		
Emissons status NO_x [2]		mg/Nm³	
Combustion [3]			

1) at 100 % load
2) with 5 % exhaust-gas oxygen
3) m = lean, st = stoichiometric

Data are approximate. Actual values depend on engine configuration options and gas quality. Details on request.

	COP with natural gas								
	1 500 (50)					1 800 (60)			
	E 302	LE 202	LE 202	LE 232	LE 232	E 302	LE 202	LE 232	LE 232
	275	550	550	450	450	300	580	450	450
	232	300	281	234	220	255	335	256	245
	173	338	314	293	253	204	352	320	271
	38.0	38.5	40.4	38.0	41.0	36.8	38.3	36.0	39.0
	55.8	50.9	49.0	50.0	47.0	56.2	51.8	52.0	49.0
	93.8	89.4	89.5	88.0	88.0	93.0	90.1	88.0	88.0
	–	< 250	< 500	< 250	< 500	–	< 500	< 250	< 500
	st	m	m	m	m	st	m	m	m

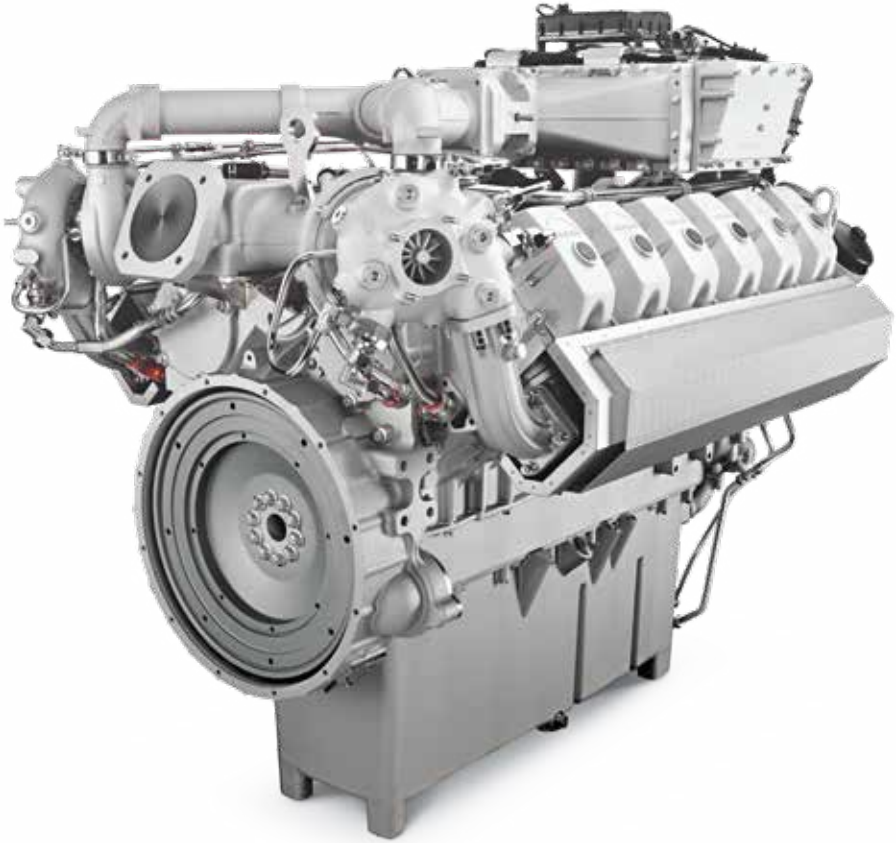

Data are approximate. Actual values depend on engine configuration options and gas quality. Details on request.

E3262

Technical features

Mode of operation		
at engine speed	rpm (Hz)	
Engine version		
Power	kW	
Coolant heat [1]	kW	
Exhaust heat based on 120 °C [1]	kW	
Efficiency [1] – mechanical		
– thermal	%	
– total		
Emissons status NO_X [2]	mg/Nm³	
Combustion [3]		

1) at 100 % load
2) with 5 % exhaust-gas oxygen
3) m = lean, st = stoichiometric

	COP with special gas									
	1 500 (50)					1 800 (60)				
	LE 202	LE 212	LE 212	LE 242	LE 242	LE 202	LE 212	LE 212	LE 242	LE 242
	550	550	550	450	450	580	580	580	450	450
	292	271	263	245	233	331	313	299	259	262
	321	303	281	290	249	368	353	315	314	279
	39.0	40.0	41.0	38.0	41.0	37.0	37.0	40.0	36.0	38.0
	50.0	47.0	46.0	50.0	48.0	51.0	49.0	48.0	51.0	50.0
	89.0	87.0	87.0	88.0	89.0	88.0	86.0	88.0	87.0	88.0
	< 500	< 250	< 500	< 250	< 500	< 500	< 250	< 500	< 250	< 500
	m	m	m	m	m	m	m	m	m	m

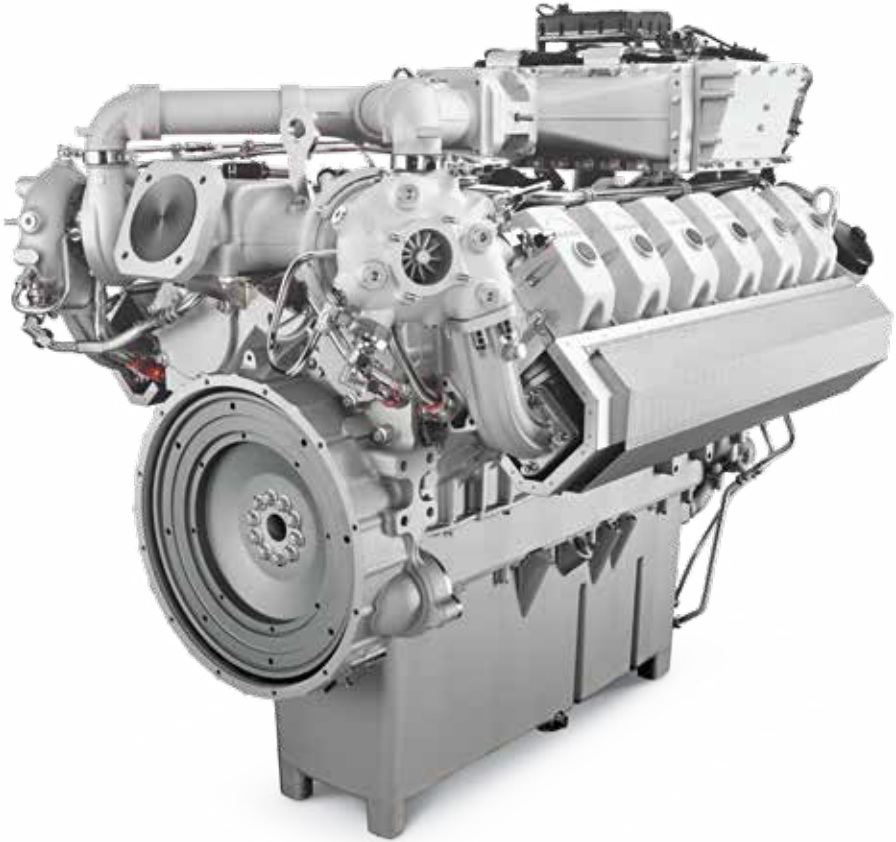

Data are approximate. Actual values depend on engine configuration options and gas quality. Details on request.

E3262

Technical features

Mode of operation			
at engine speed		rpm (Hz)	
Engine version			
Power		kW	
Coolant heat [1]		kW	
Exhaust heat based on 120 °C [1]		kW	
Efficiency [1]	– mechanical		
	– thermal	%	
	– total		
Emissons status NO_X [2]		mg/Nm³	
Combustion [3]			

1) at 100 % load
2) with 5 % exhaust-gas oxygen
3) m = lean, st = stoichiometric

	COP with natural gas + H_2 (20 % by volume)					
	1 500 (50)			1 800 (60)		
	LE 202	LE 202	E 302	LE 202	LE 202	E 302
	550	550	275	580	580	300
	272	296	234	325	329	264
	291	332	170	321	348	199
	41.6	39.2	38.0	39.8	38.0	36.8
	47.8	50.8	55.6	50.4	51.4	56.8
	89.4	90.0	93.6	90.2	89.4	93.6
	< 500	< 250	–	< 500	< 250	–
	m	m	st	m	m	st

E3872

General data

Gas engine			E3872
Engine version			LE
TYPE	Cylinders		12
	Power	kW	735
	Bore	mm	138
	Stroke	mm	165
	Displacement	l	29.6
	Overall length	mm	1 789
	Overall width	mm	1 243
	Overall height	mm	1 407
	Dry weight	kg	1 497

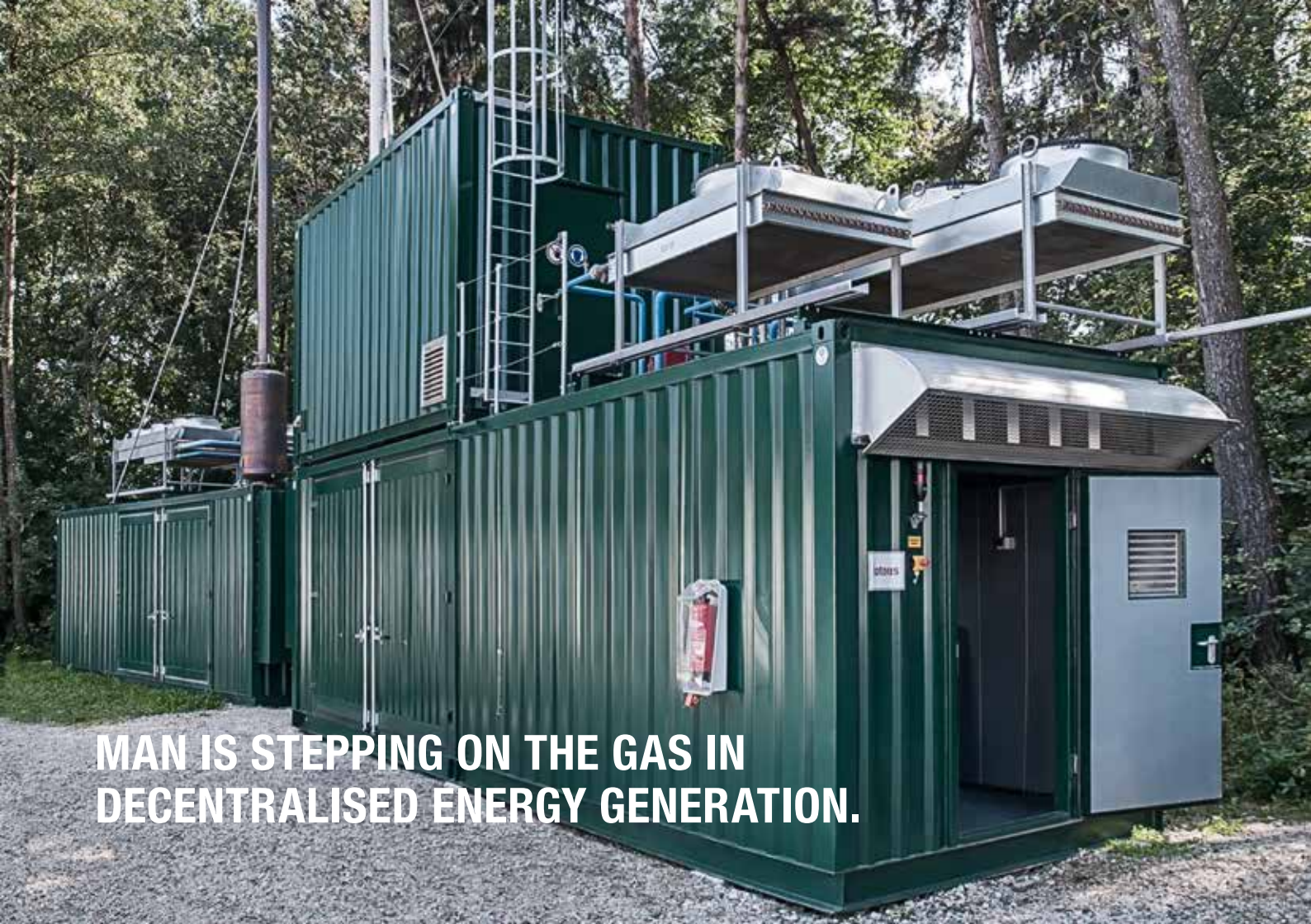

MAN IS STEPPING ON THE GAS IN DECENTRALISED ENERGY GENERATION.

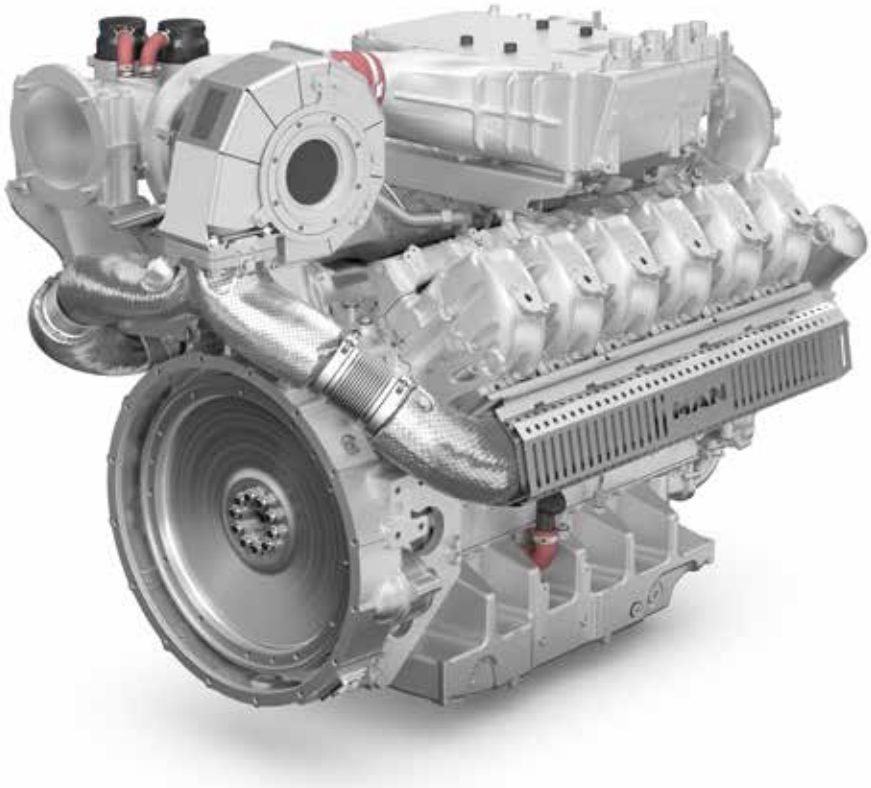

E3872

Technical features [5)]

Mode of operation		
at engine speed	rpm (Hz)	

Engine version			
Power		kW	
Coolant heat [1)]		kW	
Exhaust heat based on 120 °C [1)]		kW	
Efficiency [1)]	– mechanical		
	– thermal	%	
	– total		
Emissons status NO_X [2)]		mg/Nm³	
Combustion [3)]			

1) at 100 % load
2) with 5 % exhaust-gas oxygen
3) m = lean, st = stoichiometric

Data are approximate. Actual values depend on engine configuration options and gas quality. Details on request.

	COP with natural gas		COP with special gas
	1 500 (50)		1 500 (50)
	LE 201	LE 201	LE 201
	735	735	735
	273	273	284
	300	314	325
	44.0	44.0	44.0
	42.4	43.6	44.2
	86.3	87.7	88.2
	< 500	< 250	< 500
	m	m	m

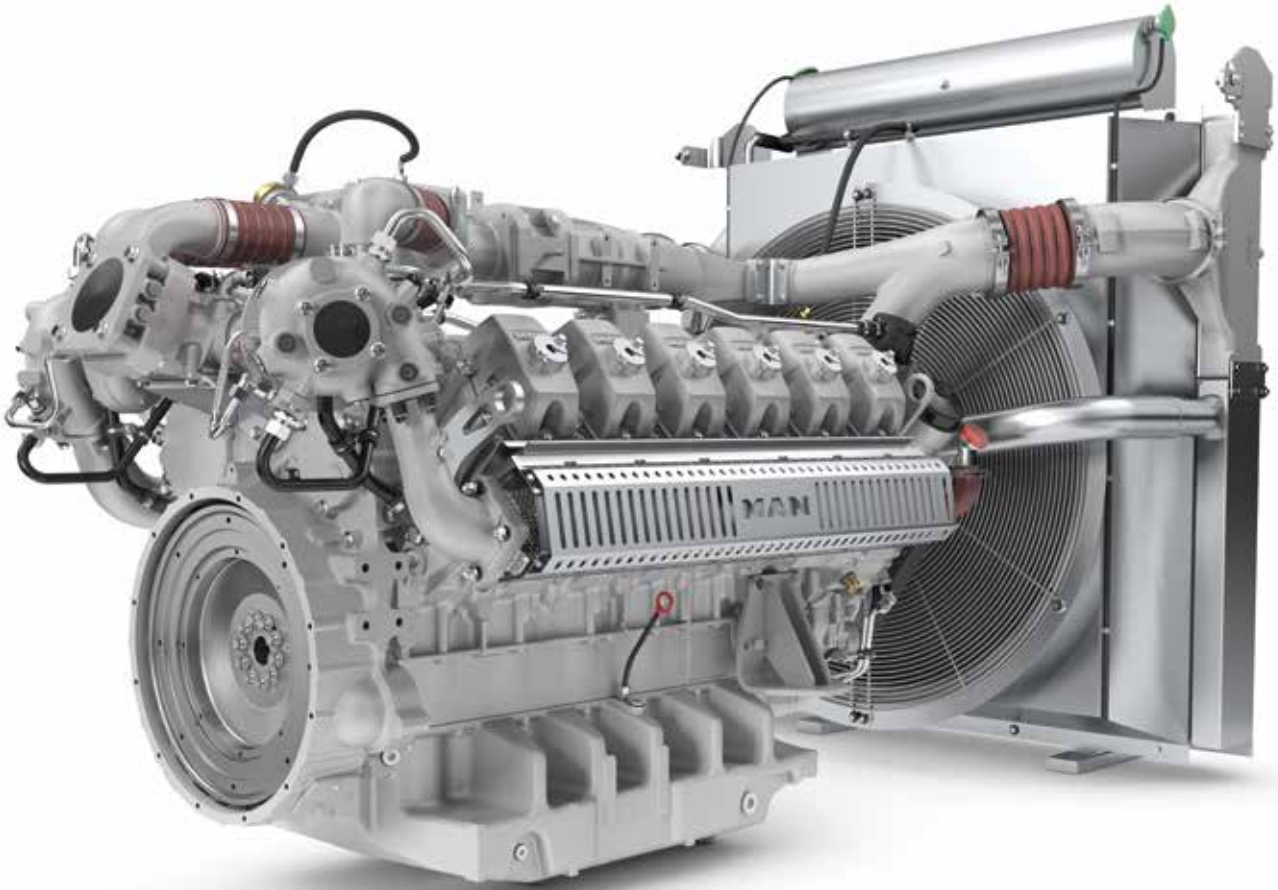

Data are approximate. Actual values depend on engine configuration options and gas quality. Details on request.

E3262 GENSET

Technical features

Mode of operation		COP with natural gas				COP with special gas	
at engine speed	rpm (Hz)	1 500 (50)		1 800 (60)		1 500 (50)	1 800 (60)
Engine version		**LE 252**	**LE 252**	**LE 252**	**LE 252**	**LE 252**	**LE 252**
Power	kW	475	530	480	530	530	530
Coolant heat [1]	kW	–	–	–	–	–	–
Exhaust heat based on 120 °C [1]	kW	306.2	304.4	335.9	323.0	312.1	304.4
Efficiency [1] – mechanical		35.8	39.0	33.4	36.4	38.5	35.3
– thermal	%	23.0	22.4	23.3	22.1	22.7	23.4
– total		58.8	61.4	56.7	58.5	61.2	58.7
Emissons status NO_X [2]	mg/Nm^3	< 250	< 500	< 250	< 500	< 500	< 500
Combustion [3]		m	m	m	m	m	m

1) at 100 % load
2) with 5 % exhaust-gas oxygen
3) m = lean, st = stoichiometric